DONGYA ELECTRONIC

ZLJM-250C

Series latch contactors

系列磁保持型接触器

01 产品型号含义 Nomination(nomogram)

ZLJM - 250C / □ · S · T · 2L · H

- H — 带引出线 With cable /leading-outwire
- L — 带“L”型双安装支架 With “L” shape double mounting bracket
- T — 带TVS管 With TVS diode
- S — 带微动开关 With microswitch
- 2 — 线圈电压 Coil voltage
- □ — 设计 改型代号(磁保持) Design and remodelcode(magnetic latching type)
- 250 — 触点电路额定电流Rated current ofcontact circuit(A)
- ZLJM - 250C — 产品型号 Product model

02 使用条件 Use conditions required

环境温度Ambient temperature：-25~+40℃

相对湿度Relative humidity：+20℃达98%(upto 98% at +20℃)

固定处的振动频率 Vibration freq. atthe fixed position：

3g、1~50Hz 振幅0.5mm

3g、1~50Hz ampl 0.5mm

安装方向 Mounting directions：任意Optional

03 特殊说明

产品线圈采取正、负脉冲激励(1、2端)，激励时间200ms≤t≤1s,线圈不能持续长期通电,操作频率不得超过每分钟6次，并且脉冲应是方波，正脉冲使触点闭合、负脉冲使触点断开，线圈去激励后，接触器触点状态由产品内的永久磁铁保持。

Productcoil is excited by positive andnegative pulse(1,2points), 200ms≤t≤1s. Longtime continuous energizing is not allowed, Operationfrequency nomore than6 time/min. It's squarepulse and positive pulse makes the contact close whilenegative pulsemakes the contact open. After theexcitation, the permanent magnet in product keeps the state ofthe contact.

04 外形安装图 Configurational mounting diagram

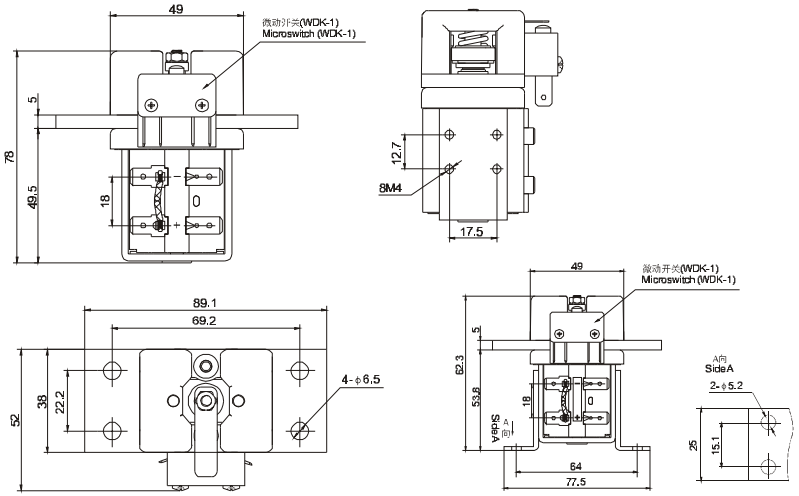

05 线路原理图 Circuit diagram

ZLJM-250C/L_
3、4为触点接线端(3、4 contact terminal)
1、2为线圈接线端(1、2 coil terminal)
L为绕组(L is winding)

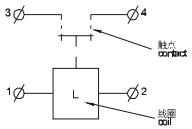

ZLJM-250C/L_ - S
带微动开关(With Microswitch)
3、4为触点接线端(3、4 contact terminal)
1、2为线圈接线端(1、2 coil terminal)
L为绕组(L is winding)
A、B、C、D为微动开关接线端(A、B、C、D aux.contact terminal)

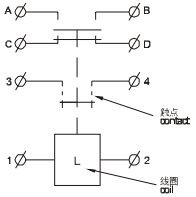

06 简要技术数据 Basic technical data

编号 NO.	参数名称 Parameters	产品代号 Product code ZLJM-250C系列 series
1	线圈额定电压 Rated coil volt(VDC)	12,24,30,48,60,72,120等etc
2	(20±5)℃下，冷态动作电压(V) Operating volt incold state at(20±5)℃	线圈额定电压的(25~70)% (25~70)% ofrated coil volt
3	触点电路额定负载电流Rated load currentof contact circuit(A)	250A
4	触点电路额定电压 Rated volt ofcontact circuit(V DC)	60
5	100A负载下主触点接触压降 Contact volt dropof main contactat 100A	不大于80mV not above80mV
6	最小脉宽度 Min pulse width	200mS
7	介质耐压(相互绝缘的导电部分) Dielectric strength(Between Insulatedelectric parts)	1000VAC 50/60Hz(1minute)
8	电寿命 Electric life	20,000 Ops.
9	机械寿命 Mechanical life	10万次 100,000 Ops.
10	线圈电流 Coil current	小于700mA <700mA
11	工作规范 Working duty	连续 Continuous